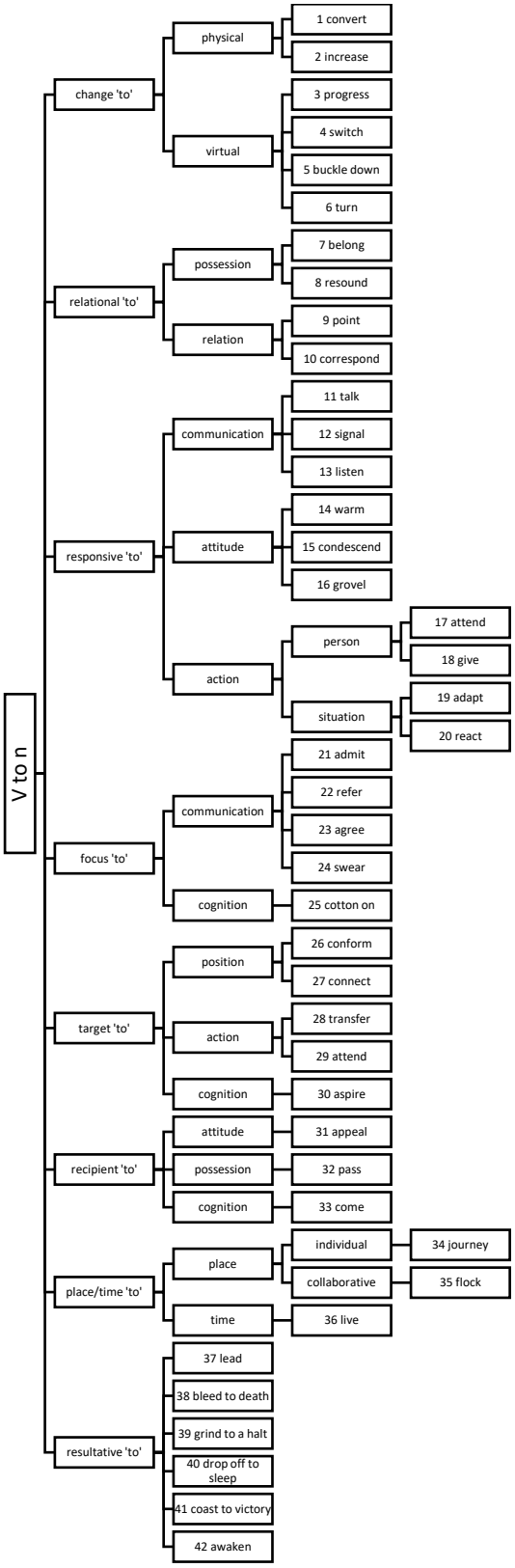
V to n
change 'to'
physical
1 convert
2 increase
virtual
3 progress
4 switch
5 buckle down
6 turn
relational 'to'
possession
7 belong
8 resound
relation
9 point
10 correspond
responsive 'to'
communication
11 talk
12 signal
13 listen
attitude
14 warm
15 condescend
16 grovel
action
person
17 attend
18 give
situation
19 adapt
20 react
focus 'to'
communication
21 admit
22 refer
23 agree
24 swear
cognition
25 cotton on
target 'to'
position
26 conform
27 connect
action
28 transfer
29 attend
cognition
30 aspire
recipient 'to'
attitude
31 appeal
possession
32 pass
cognition
33 come
place/time 'to'
place
individual
34 journey
collaborative
35 flock
time
36 live
resultative 'to'
37 lead
38 bleed to death
39 grind to a halt
40 drop off to sleep
41 coast to victory
42 awaken

V to n